THE INFORMATION DISCLOSED HEREIN IS THE PROPERTY OF EXERGEN CORPORATION. EXERGEN RESERVES ALL PATENT, PROPRIETARY, DESIGN, USE, SALE, MANUFACTURING AND REPRODUCTION RIGHTS THERETO.

REVISIONS

REV	ZONE	DESCRIPTION	ECO	DATE	APPROVED
1	N/A	RELEASE	2065	5/03	B.D.

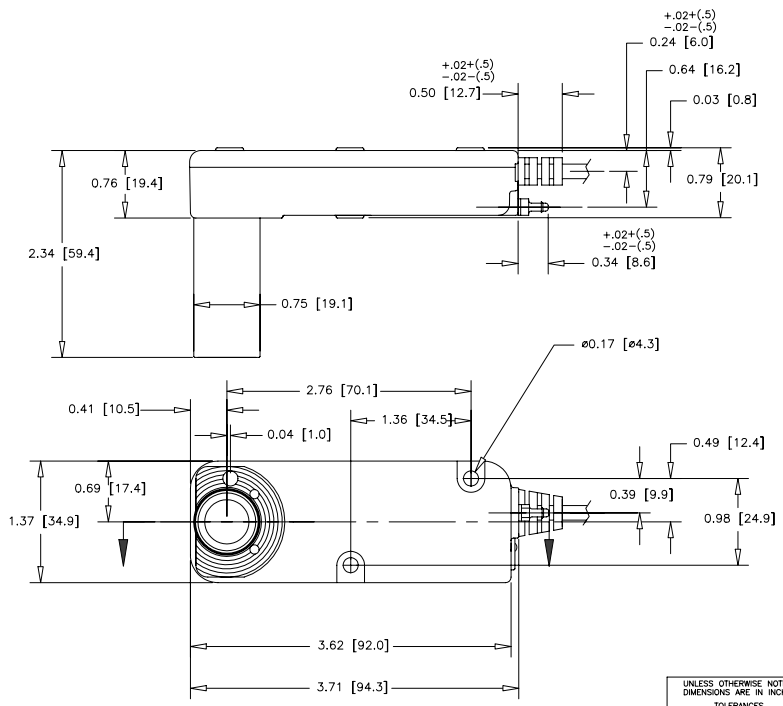

UNLESS OTHERWISE NOTED DIMENSIONS ARE IN INCHES TOLERANCES N/A	DR: Bob T.5/03	EXERGEN CORPORATION
	CHK:	
	APPD:	TITLE: 20:1 Smart IRt/c, Outline Drawing
MATERIAL: n/a	APPD:	
FINISH: n/a		SIZE: B / DRAWING NO.: / REV.: 1
		SCALE: 1x / 1 / SHEET: 1 OF